OSEPP PIR Sensor

(Arduino Compatible)

PIR-01

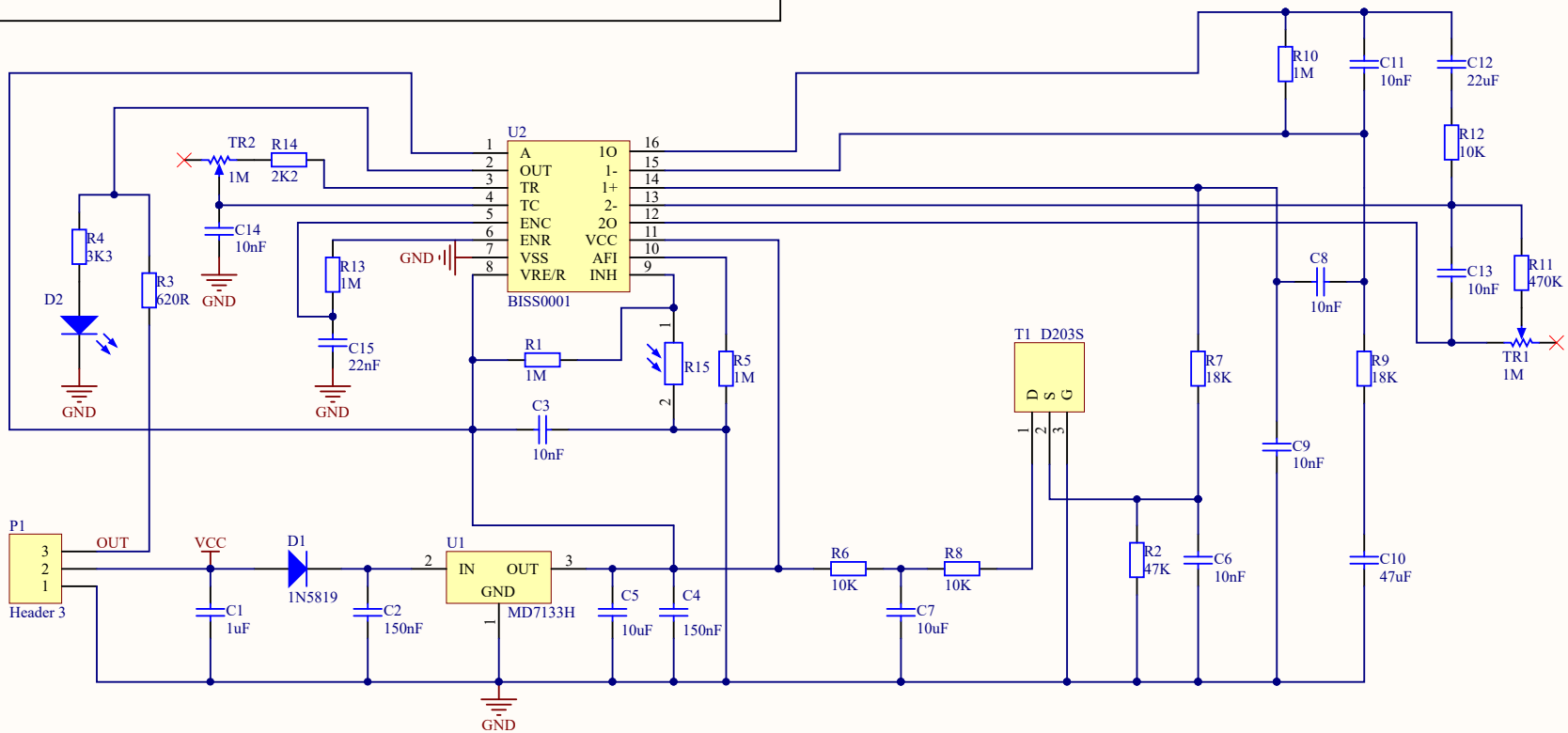

TITLE: PIR-01

DATE: 2015/08/10